STATE	PROJECT NUMBER	SHEET NO.	TOTAL SHEETS
GA	0010418		

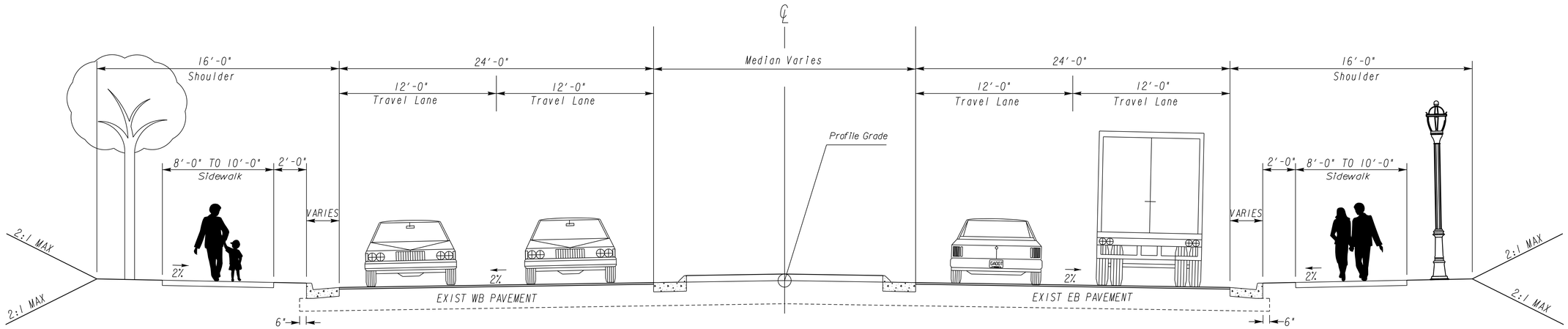

TYPICAL SECTION #1
EXISTING 4-LANE SECTION

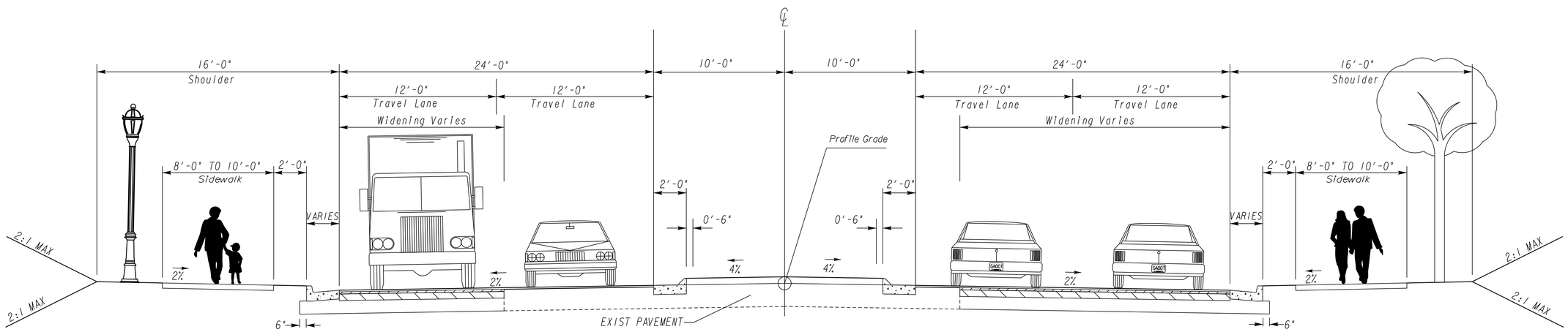

TYPICAL SECTION #2
EXISTING 2-LANE SECTION

CITY OF JOHNS CREEK GEORGIA

TYLIN INTERNATIONAL
260 PEACHTREE STREET SUITE 900
ATLANTA, GEORGIA 30303
PHONE: (404) 841-7886 FAX: (404) 841-7887

NOT TO SCALE

REVISION DATES

CITY OF JOHNS CREEK
GEORGIA

TYPICAL SECTIONS

SR 120 / KIMBALL BRIDGE RD
WIDENING

DRAWING No.
05-001